University of Technology
Department of Applied Sciences
Final examination 2015/2016

Subject : modern physics
Branch : Applied physics
Examiner :Dr. Esam A. Tawfiq

Class: second level
Time : 3 hours
Date :

NOT: ANSWER FOUR QUESTIONS ONLY

1- A photon of 1MeV collides with a free but stationary electron and scattered of at 90°. what are the energies of the scattered photon and the kinetic energy of the recoiling electron?

2- The photoelectric work function of potassium is 2.3 eV. Light having a wavelength of 260 nm falls on potassium. (a) Find the stopping potential for light of this wavelength. (b) Find the kinetic energy of the most energetic electrons ejected. (c) Find the speeds of these electrons.

3- A sample of hydrogen atoms is irradiated with light with a wavelength of 85.4 nm, and electrons are observed leaving the gas. (a) If each hydrogen atom were initially in its ground level, what would be the maximum kinetic energy in electron volts of these photoelectrons? Not the ground state energy is −13.60 eV.

4- The electrons in Davisson-Germer experiment had a kinetic energy of 54 eV.
   (A) Calculate the DeBroglie wavelength of these electrons.
   (B) What would be the DeBroglie wavelength of protons of the same kinetic energy of 54 eV ?

$1.6 * 10^{-27}$ kg

5- An electron is in a box 0.1nm across, which is the order of magnitude of atomic dimensions. Find its minimum energy of the electron.

GOOD LUCK

University of Technology
Department of Applied Sciences
2st examination 2015/2016

Subject : Electrical circuits | **Class : 2nd year**
Branch : Applied physics | **Time : 3 hours**
Examiner: Dr. Wafaa Abdul khaliq | **Date :**

Answer four questions only

Q-1-A- Calculate the current through resistance of 33 m of copper wire if the diameter is 0.3mm and the voltage drop across it is 16V and (ρ= 1.724*10^{-6} Ω-cm).

Q.1-B- Write the expression for the waveforms with the phase angle in degrees. (8 marks)

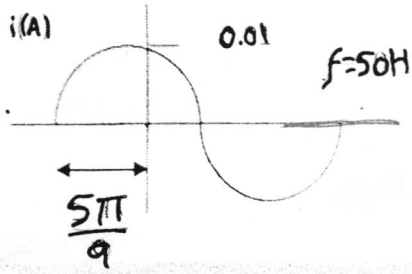

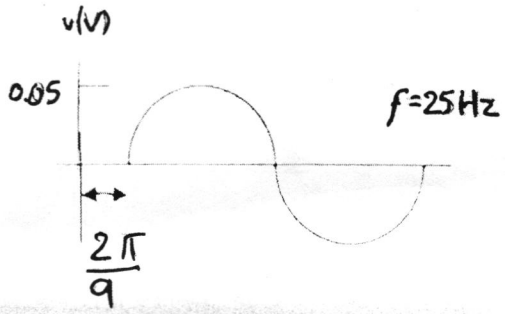

Q-2- Find the current in 8 Ω resistor using Thevenin theorem.

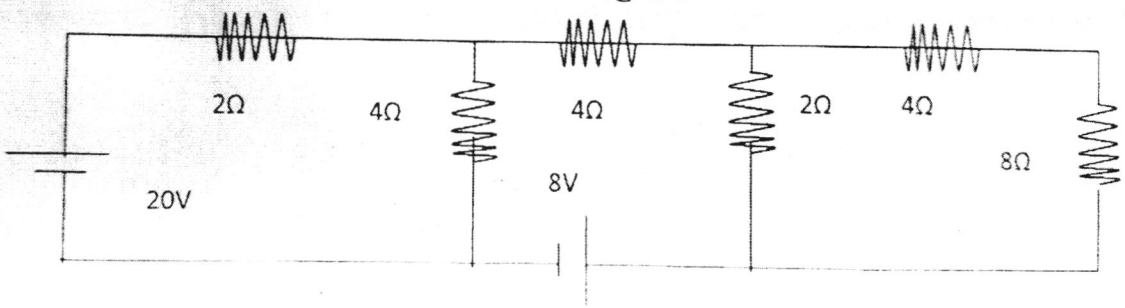

Q-3-Using a Δ-Y or Y-Δ conversion, find the current I.

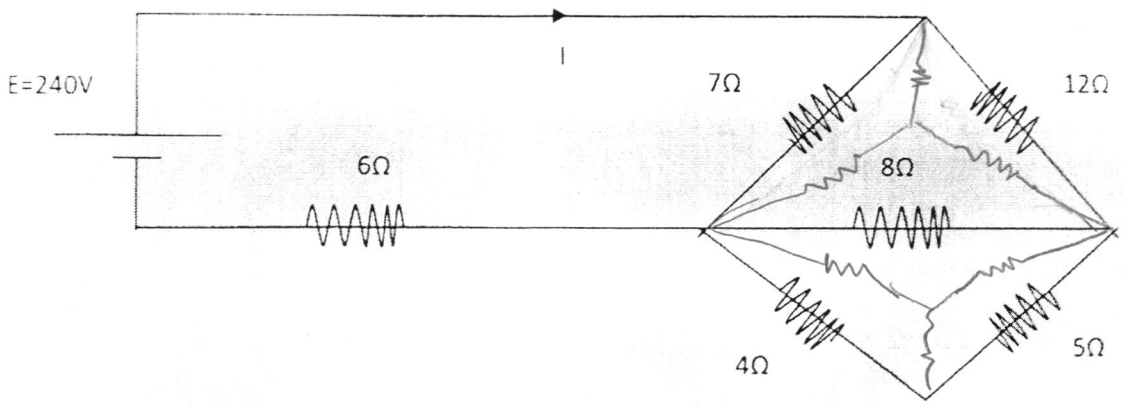

University of Technology
Department of Applied Sciences
2st examination 2015/2016

Subject : Electrical circuits | **Class : 2nd year**
Branch : Applied physics | **Time : 3 hours**
Examiner: Dr. Wafaa Abdul khaliq | **Date :**

Q-4- A-Find the total impedance Z_T in polar form.

B-Draw the impedance diagram.

C-Find the current in phasor form.

D-Find the value of L.

E- Plot the wave form for the current and voltage.

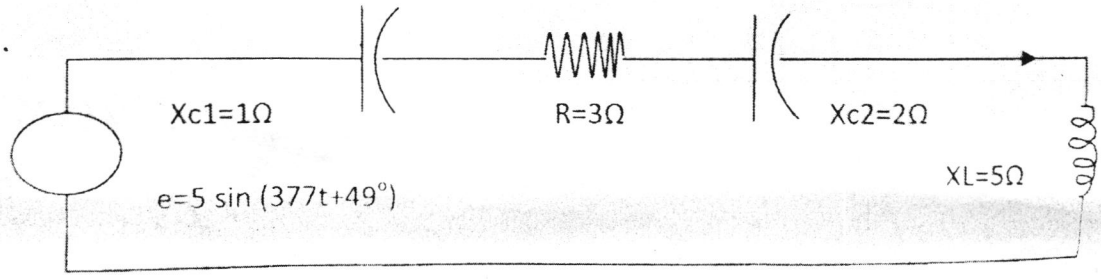

Q-5-Find V_1.

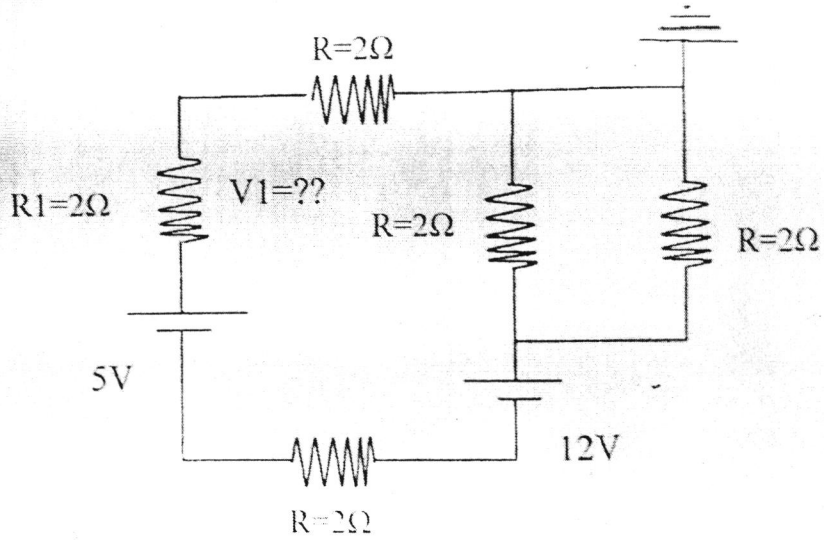

University of Technology
Department of Applied Sciences
Final Examination 2015/2016

Subject: Visual Basic
Branch : mathematics & physics
Examiner : Samaa Fuad

Class : 2nd year
Time : 3 hours
Date :20/9/2016

Note: Answer four questions only.

Q.1: A/ write a program to compute area of a circle. Use a suitable input and output methods.

B/ Write a program to find the function f where

$$f = \begin{cases} -x & if\ x < 0 \\ x & if\ x \geq 0 \end{cases}$$ (6.5M)

Q.2: A/ What are the following properties used for? (answer 3 only) (6M)

1) Multiline in text box 2) Forecolor 3) Sorted in list tool
4) caption

B/ Write a program to compute the summation of 1 to 10 (6.5M)

Q.3: A/ What is the difference between: (6M)

1- forecolor, backcolor 2- inputbox, messagebox 3- do while, do untle

B/ Write a program to enter a mark of a student then print (pass) if his mark greater than or equal to 50 and print (fail) otherwise. (6.5M)

Q.4: A/ write a program to find the length of a string? (6M)

B/ Design a form with a text box. Such that when user enters g, b and y the form colored to green, blue and yellow respectively. (6.5M)

Q.5: A/ How many methods of inputting variables in V.B.? give an example for each one. (6M)

B/ Write a program to find the average of (5) numbers. (6.5M)

Best wishes

University of Technology
Department of Applied Sciences
Final Examination
2015 -2016

Branch: Applied Physics
Subject: Thermodynamic
Examiner: Dr. Mukhlis M. Ismail

Class : 2nd year
Time : 3 hours
Date :

Note: Answer 4 questions only. (25 points for each question)

Q1/ A) A) Define of the following: (18 points)

1) Isothermal process, 2) Reversible process, 3) Closed system

4) Spontaneous process, 5)Second law of thermodynamic, 6) Isolated system

B) Calculate the energy ΔU required to increase the temperature of 2.50 mol of an ideal monatomic gas from 15.0 °C to 65.0 °C. (7 points)

Q2/ Find ΔU, ΔH, q, w, and ΔS for a reversible ideal gas of curve A, B and C shown in figure, then prove that ΔU, ΔH, and ΔS are state function while q and w are not.

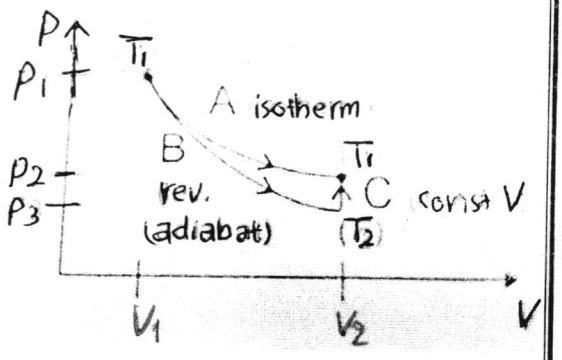

Q3/ A) Two Carnot heat engines operate in series between T_C= 1800 K and T_L=300 K. If the thermal efficiencies of both engines are the same, find the temperature of the intermediate medium between the two engines. (10 points)

B) Prove that: a) $C_p = C_v + [p+(\partial U/\partial V)_T](\partial V/\partial T)_p$, b) $C_v=(\partial U/\partial T)_v$.

Q4/ A) Prove that: a) $(T_2/T_1) = (V_1/V_2)^{\gamma-1}$ along a reversible adiabatic process. b) $\Delta A = \Delta U - T\Delta S$,

B) Suppose 1 mole of an ideal gas is allowed to freely expand into an evacuated container of equal to volume so that the volume of gas doubles. What is the entropy change of the gas if no work is done on expands. (R=8.31J/(mol.K)). (10 points)

Q5/ A) A heat pump is used to maintain the inside temperature of a house at 20.0 °C when the outside temperature is 3.0 °C. What is the minimum amount of work necessary to transfer 100.0 J of heat to the inside of the house. (13 points)

B) The heat capacity of a solid is Cp = 125.48 J K−1. What is the change in its entropy if it is heated from 273.0 K to 373.0 K? (12 points)

University of Technology
Department of Applied Sciences
Branch Of Applied Physics
Final Examination
2015 -2016

B

Branch: Applied Physics
Subject: Material Properties
Examiner: Sadeq H.Lafta

Class : 2nd year
Time : 3 hr
Date :

Choose only four questions

Q1.

A) Prove that the relationship: {**J** (current density) = **σ** (conductivity) * ξ (electric field)} is another form of Ohms law. (5 degree)

B) A metal has length=15m, diameter=5mm, carrying a load of 1.5 kN (≈ 150 kg). If the elastic modulus is 200 GPa what is the new length of the wire? (7.5 degree)

Q2.

A) What is the *main* difference between? (6 degree)

a. Elastic deformation and plastic deformation.
b. Ferrimagnetic and antiferrimagnetic material.
c. Electronic Energy structure of solids and of atom.

B) Find the conductivity of copper at 300K, where the collision time (τ) for electron scattering $2x10^{-14}$ s at 300K. Given $e=1.6x\ 10^{-19}$ C, $me=9.1x10^{-3}1$Kg. copper density 8960 Kg/m3 and its atomic weight is 0.0635 Kg/mole. (6.5 degree)

Q3.

A) Why? (6 degree)

a. In non-Rare earth metals Orbital –paramagnetism is usually weak.
b. Completely filled electron bands are diamagnetic.
c. Conductivity depends on bonding type and energy gap.

B) The metal rhodium has a FCC crystal structure, if the angle of diffraction for the (311) set of planes occurs at (36.12°) -first order reflection- when monochromatic X-ray having a wave length of (0.0711nm) is used. Compute (1) the planes spacing d for this set of and (2) the atomic radius for rhodium atom.(6.5 degree)

Q4.

A) Define: (6 degree)

Energy band gap, Two applications of superconductor, Hund's rule, magnetic domains.

B) Draw a B-H curve showing the behavior of each kind of magnetic materials with respect to μo curve.(6.5 degree)

Q5.

A) Draw the following crystalline planes: (112)and (101). (5 degree)

B) In the adjacent figure which shows the B-H curve for a nickel–iron alloy. Find roughly:

(a) The saturation flux density B_s?
(b) The remanence B_r?
(c) The coercivity H_c? (7.5 degree)

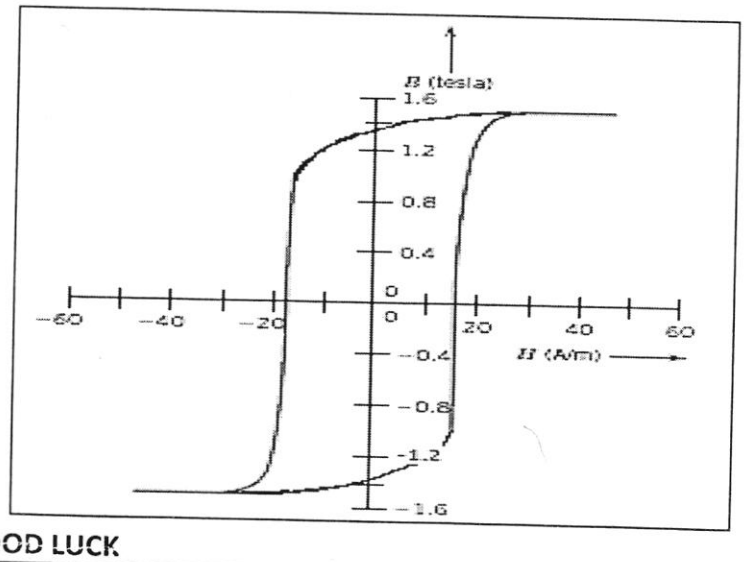

GOOD LUCK